Trio GENERATOR

OUTPUT VALUES

Standby Power	Voltage	230/400
Standby Power	kVA	700
Standby Power	kW	560
Standby Power	Amper	1008
Prime Power	Voltage	230/400
Prime Power	kVA	630

Prime Power	kW	504
Prime Power	Amper	907

DIESEL ENGINE

Brand	Shanghai
Model	SC26H612e
Max. Total Output Pow. (kWm/hp)	550 / 750
Cylinder Displacement (lt)	26,6
Cylinder Orientation	12 V TYPE
Bore x Stroke(mm*mm)	135*168
Compression Ratio	16,5;1
Governor Type	Electronic
Rotation	1500 RPM
Aspiration System	Turbo Charge
Injection	Direct
Cooling System	Water Cooled
Electrical System(V DC)	24
Oil Capacity (lt)	57,4
Engine Coolant Capacity (lt)	84
Fuel Cons. %50 (lt/h)	74
Fuel Cons. %75 (lt/h)	106
Fuel Cons. %100 (lt/h)	141

ALTERNATOR

Standby Power (kVa/kw)	700/560
Prime Power (kVa/kw)	630/504
Brand	TRIO
Output Voltage (V)	231/400
Frequency (Hz)	50
Stationary Vol. Regulation(±)	0,01
Short Circuit Current	%300 (10 sec)
Insulation	H
Protection	IP23
E ciency (%)	92
Overloading	110% for 1 hour
Power Factor (cos Q=0.8)	0,8
Tot. Harmonic Dist. Rate	<1 %
Connection Type	Star
Number of Pole	4
Number of Bearing	Single

DIMENSIONS & WEIGHT

Without Canopy	Width	2000 mm
Without Canopy	Length	4500 mm
Without Canopy	High	2500 mm
Without Canopy	Weight	5100
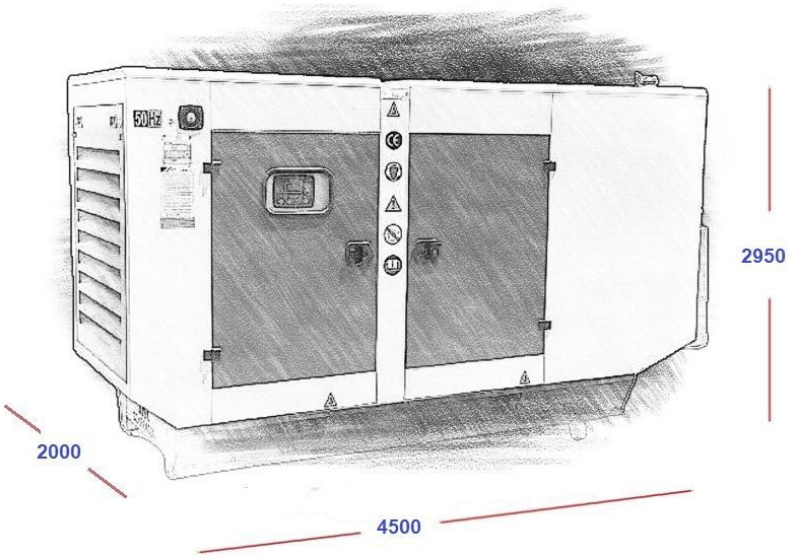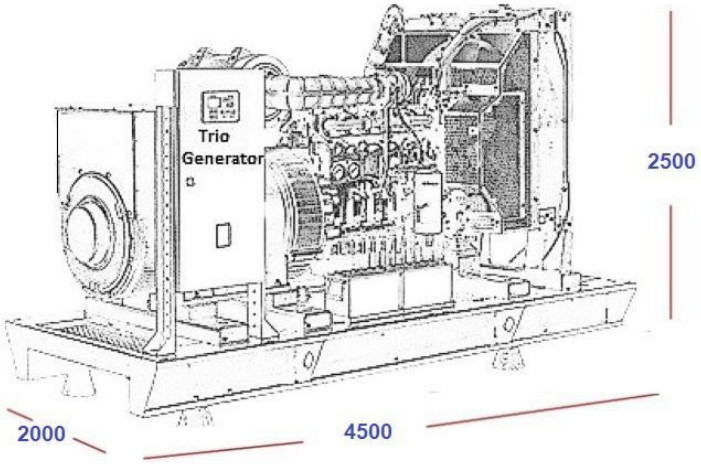
Without Canopy	Fuel Tank Capacity	1200 lt
With Canopy	Width	2000 mm
With Canopy	Length	4500 mm
With Canopy	High	2950 mm
With Canopy	Weight	6225
With Canopy	Fuel Tank Capacity	1200 lt